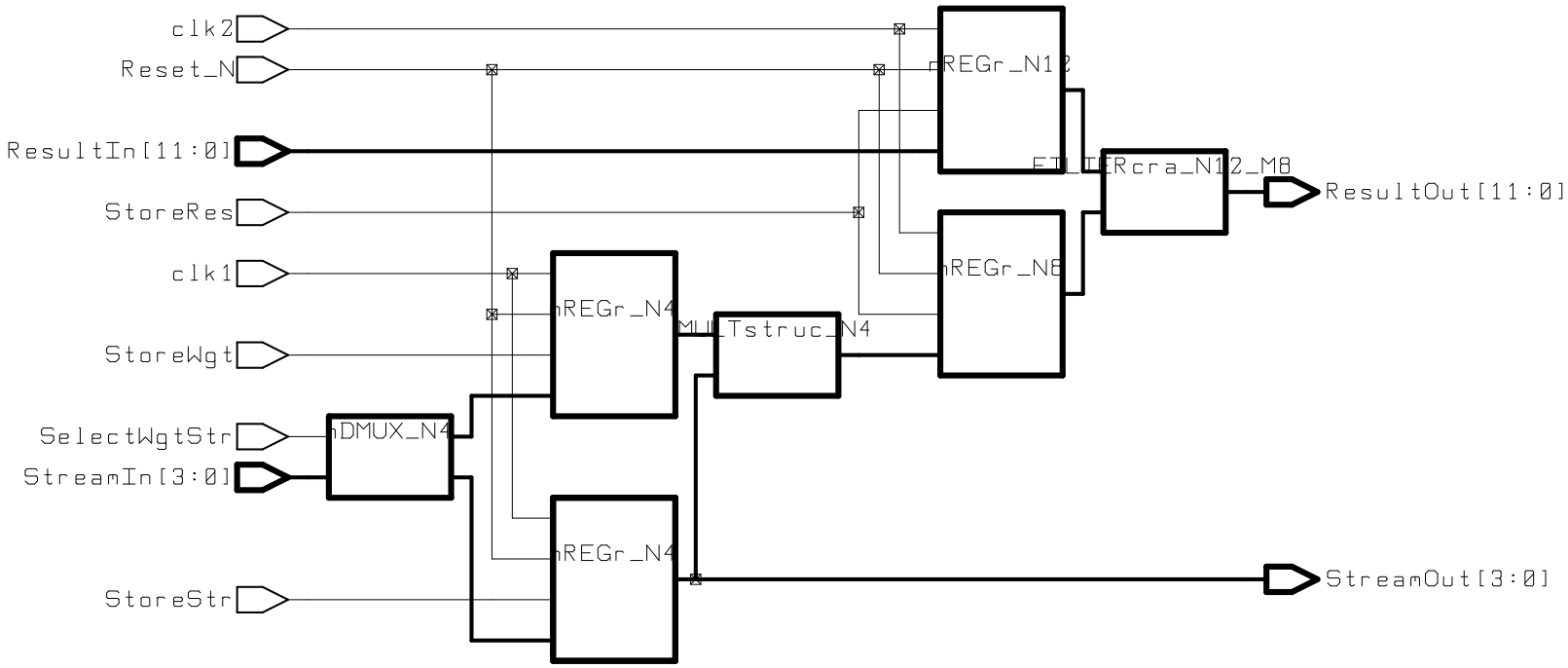

design: FILTERstage	designer: hpe	date: 7/6/95
technology:	company: REFT	sheet: 1 of 1